First International Symposium on Fishing Vessel Energy Efficiency
E-Fishing, Vigo, Spain, May 2010

# Ducted Propellers. A Solution for Better Propulsion of Ships. Calculations and Practice.

H. Haimov[1], M$^a$. J. Bobo[2], J. Vicario[3], J. del Corral[3]

[1]Propulsors department, CEHIPAR, Madrid, Spain.
[2]Projects department, CEHIPAR, Madrid, Spain.
[3]CFD department, CEHIPAR, Madrid, Spain.

*Abstract*— **After enumerating the advantages of applying ducted propeller units on ships a short review of the hydrodynamic calculations methods is presented. A short description of the prediction calculation methods available in CEHIPAR is given together with a validation exercise for the RANSE code, based on comparison with model series and test for open water behaviour of the propulsor. A real practical case explained has shown that an integral approach combining calculation methods and model tests is able to solve successfully the hydrodynamic problem of the propulsion of a fishing vessel based on ducted propellers. The ship fulfilled the requirements for low vibration levels and showed better propulsive efficiency. The conclusions refer to the particular role of the different numerical approaches in the engineering practice.**

***Keywords – cavitation, CFD, ducted propeller, Euler solver, model tests, propulsion, RANSE code, validation.***

## I. INTRODUCTION

In various occasions, our institution, “Canal de Experiencias Hidrodinámicas de El Pardo” (CEHIPAR), has been asked to solve the propulsion of a ship that would suffer severe cavitation, vibrations and noise if the ship hull and the propeller unit are not properly selected and designed.

Various solutions are possible and applied depending on the peculiarities of the case, among them a carefully designed wake adapted conventional propeller (see for example Haimov, 2008), or end-plate propellers (Pérez Gómez et al., 2006). Here we will focus on another option – the well known two-component propulsor called ducted propeller (DP), consisting of propeller located inside a nozzle.

Since Kort nozzles (annular foils) have been introduced in the 30ties of the past century many ships have been fitted with ducted propellers, especially tugboats and trawlers experiencing high loads on the propulsor – condition for obtaining gain of propulsive efficiency.

The advantages of the ducted propellers can be summarized as:

- Increased thrust
- Protection of the propeller blades
- Greater hydrodynamic efficiency
- Reduction of cavitation, vibrations and noise
- Better manoeuvrability using azimuthing thrusters
- Safety in ice,

among others. Applied with success for relatively slow ships, their principal shortcoming is that they are more easily fouled than the open propellers in the presence of seaweed and debris.

The first advantage is characteristic for the accelerating type DP and although better regulation of the pressure can be obtained by using decelerating flow type nozzles the attractive gain in hydrodynamic efficiency explains their major use.

A significant jump in the practical use of DP has been observed after the development of a series of propellers in nozzles, especially those developed in NSMB, Wageningen, between 1954-1959, and more when regression polynomials permitted to search for optimum DP of the *Ka* series (Oosterveld, 1970), and the modified *Kc* series. This later resulted equivalent in performance to the former, as shown by (Yossifov, Zlatev and Staneva, 1984).

New types and shapes of nozzles appeared later and nowadays the interest in DP is still high, focusing, even more than on the efficiency, on the possibility of reduction of cavitation, noise and vibrations and to the improvement of the steering of the ships.

## II. CALCULATIONS

The simplification of the complex 3-D flow permitted the development of the first theories for calculating ducted propellers appearing in the period of 1955-1962 in the works of Dickmann & Weissinger, and Morgan (1962). When the

---

This work has been partially sponsored by the European Commission, Grant Agreement 234182 of the Seventh Framework Programme.

power of the computers permitted it, more elaborated methods based on the calculation of axisymmetric inviscid vortex flows have been developed in the 70ties by Lewis and Ryan (1972), Gibson and Lewis (1973), Varsamov and Haimov (1978, 1979, 1985) etc. The propeller has been modeled as an actuator disc interacting with the nozzle. In the 80ties Falcao de Campos (1983) made a broad contribution in the field, including also the sheer flow characteristics when calculating the DP in non-uniform flow. Actually, Baltazar and Falcao de Campos (2009) reported an advanced panel method for the prediction of the DP performance. A panel method has been also developed by Kerwin, Kinnas, Lee and Shih (1987) and extended to the unsteady case of cavitation predictions by Lee and Kinnas (2006).

Since 1999 various steady RANSE applications for DP have been published: Abdel-Maksoud and Heinke (1999), Sánchez-Caja, Rautaheimo and Siikonen (2001), to mention the pioneers. A reduction of the considerable computer time necessary has been reported by Hoekstra (2006) simplifying the propeller contribution, modeling it as an actuator disk.

The scale effect, the boundary layer on the duct, the tip leakage vortex flow in the gap between the blades and the nozzle inner surface, the interaction with a rudder, etc. are typical problems having considerable viscous character and several publications are trying to advance the knowledge on this matter (see for example Kim, Peterson and Stern (2004) and Sánchez-Caja, Pylkkanen and Sipila (2008)).

### *A. The RANSE solver and its validation for ducted propellers*

The CFD code used for our calculations is the commercial RANSE solver Ansys CFX® (2009) with the meshing tool ICEM®. The Reynolds Averaged differential Navier-Stokes equations are numerically solved by a finite volume technique, discretizing the computational domains.

From the available turbulence models, following the positive experience of other authors (Abdel-Maksoud and Heinke, 2002), for example, we used the shear stress transport equations (SST model) as in previous experience for open propellers (Haimov, Terceño and Trejo, 2007).

The definition of the computational domains is done taking into account the presence of a stationary and rotational bodies. The nozzle is placed into an external stationary cylindrical domain, and the propeller is inside the internal rotational domain. Continuity is required at the border of the domains.

The calculations have been carried out in uniform inflow specified as the boundary condition at the inlet, being the outlet defined by a constant pressure. The axial symmetry of the flow has been used by imposing symmetry conditions on a sector accounting for the number of blades, thus reducing the size of the numerical problem. On the surfaces of the rigid bodies the non-slip boundary condition is imposed.

The quality of the mesh is critical in CFD calculation using RANSE methods. In this paper, a non-structured mesh of tetrahedrons was used, including prism layers in the boundary layer zones. In order to obtain a better mesh definition in the blades boundaries, a narrow band of finer mesh was added near the leading and trailing edges and the tip. A similar approach was followed with the nozzle borders. The grid used in the calculations contains close to 2 million cells over a sector. Figure 1 shows the computational grid on the propeller and the nozzle:

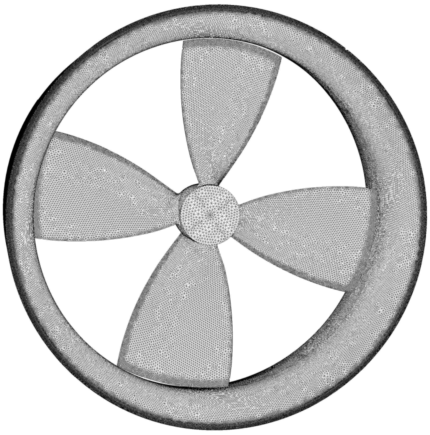

Figure 1. Gridding of the propeller and the nozzle using ICEM.

In order to validate the parameters of the computations a case of open water corresponding to a scaled model of ducted propeller Ka4-60-19A, P/D=1.14 from the Wageningen series has been chosen, model tested in CEHIPAR (Bobo and de la Rosa, 2004). The computations have been carried out on 64 bits AMD "Opteron 250" computer of 16 GB main storage. Computational time of about 5 hours for one regime (advance) was necessary to obtain converging results of precision $10^{-4}$.

The results as open-water curves of thrust, torque and efficiency, without any empiric corrections, are presented in the Figure 2 below. The nomenclature of the figure follows the recommendations of the ITTC, 2008.

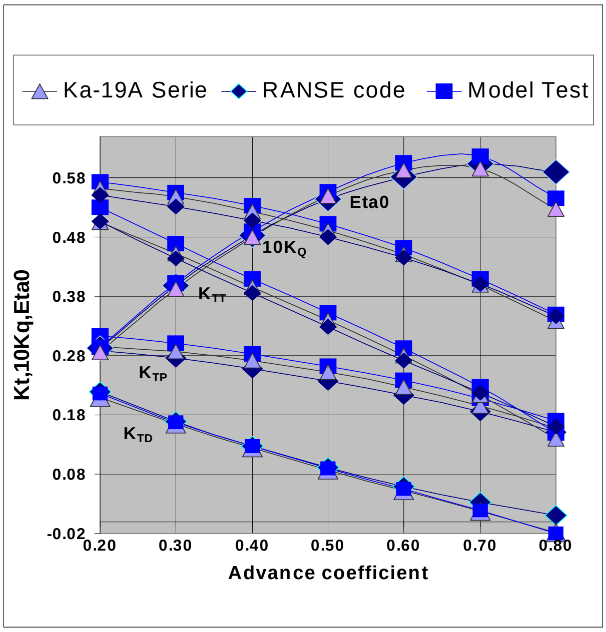

Figure 2. Open water curves: calculations, series regressions and model test.

Except in the zone of little interest and small forces of advances beyond the maximum efficiency, the agreement between the RANSE calculations, the model tests and series data is very good. In that region the prediction of the nozzle thrust is excellent. For the propeller, the deviations of thrust and torque do not exceed 7%. The efficiency is predicted even better (within 4%). The computation of one case having drastic general increase of the grid resolution resulted in insignificant improvement of the results.

### *B. The Euler Solver combined with Liftinig surface method*

The axisymmetric Euler equations solver combined with body force presentation of the propeller calculated by vortex lattice method (Kinnas, Young, Lee, Gu and Natarajan, 2003) has been used to compute the ducted propeller in the non-uniform wake inflow. This inviscid approach is applied here with the additional simplification for the influence of the effective wake restricted only to its circumferentially mean axial component. An early version of the iterative solution using programs GBFLOW-3X/MPUF-3A provided by a Consortium on Cavitating Propulsors leaded by prof. S. Kinnas was also applied to evaluate the sheet cavitation on the blades, as done in multiple occasions before for open propellers in non-uniform flow (Haimov, Valle, Baquero, 2002). The time necessary for the calculations of a typical case is around 30 minutes on a HP Alpha work station.

## III. MODEL TESTS

Model hydrodynamic tests were carried out in the CEHIPAR Towing tank and Cavitation Tunnel. The nozzle of ducted propellers is treated as part of the propulsion unit. During open water and self-propulsion tests the thrust of the nozzle is measured simultaneously with the thrust, torque and rate of revolutions of the propeller. A set up of the propulsor behind the ship model is shown in Figure 3 below.

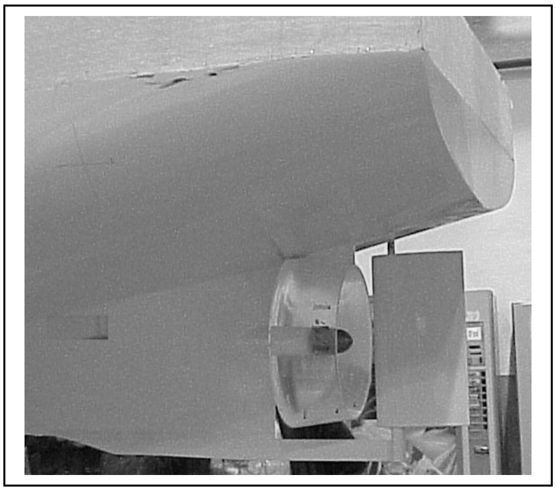

Figure 3. Afterbody of the ship model with the ducted propeller

The cavitation tests, modelling the pressure conditions, follow the thrust identity method. The inflow to the DP is usually simulated by a wire mesh reproducing the nominal wake field (Figure 5) behind the ship model.

## IV. PRACTICAL CASE

An example of the successful application of ducted propeller on a ship is the propulsion solution for the fishing research vessel FRV_EB. The main particulars of the ship and its propulsion characteristics are shown in Table 1.

TABLE 1: MAIN PARTICULARS OF THE SHIP

| | |
|---|---|
| Length overall | 29.0 m |
| Breadth, moulded | 7.5 m |
| Displacement | 249 T |
| Block coefficient | 0.4875 |
| Draught, moulded | 2.6 m |
| Type of propulsion engine | Diesel |
| MCR Power | 670 kW |
| Nominal revolutions | 1800 rpm |
| Reduction ratio | 1:6 |
| Type of the definitive propulsor | Ducted propeller |
| Ship Speed | 12 knots |

The model tests (Bobo, de la Rosa, Masip, Quereda, Pangusión, 2005) revealed the appearance of developed sheet cavitation on the blades of the conventional open propeller from the stock of CEHIPAR. Figure 4 shows the cavitation patterns on the blades at different angular positions:

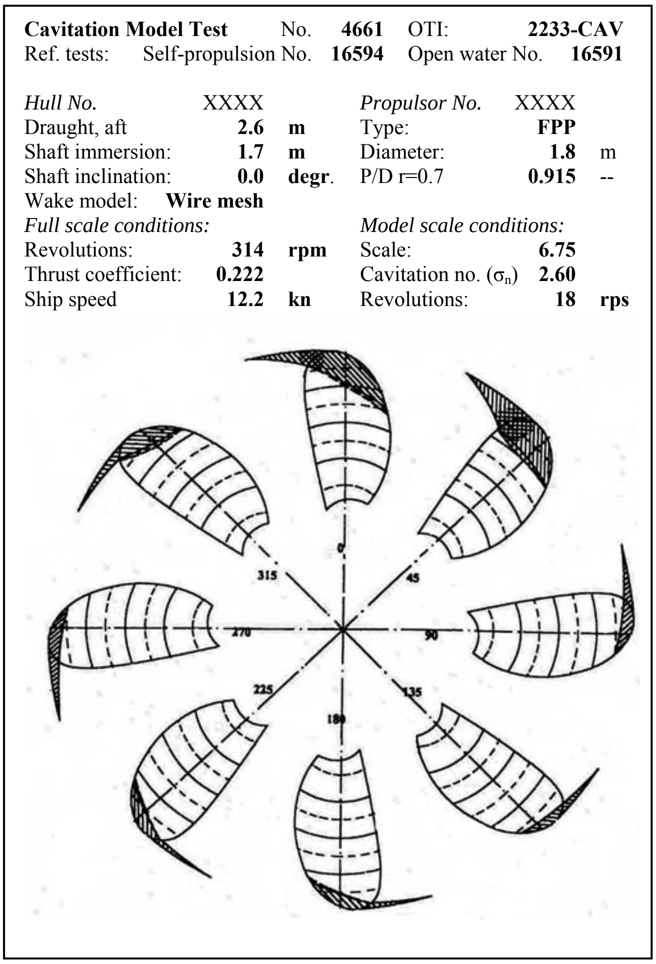

**Cavitation Model Test** No. **4661** OTI: **2233-CAV**
Ref. tests: Self-propulsion No. **16594** Open water No. **16591**

| | | | | | |
|---|---|---|---|---|---|
| *Hull No.* | XXXX | | *Propulsor No.* | XXXX | |
| Draught, aft | **2.6** | **m** | Type: | **FPP** | |
| Shaft immersion: | **1.7** | **m** | Diameter: | **1.8** | m |
| Shaft inclination: | **0.0** | **degr**. | P/D r=0.7 | **0.915** | -- |
| Wake model: | **Wire mesh** | | | | |
| *Full scale conditions:* | | | *Model scale conditions:* | | |
| Revolutions: | **314** | **rpm** | Scale: | **6.75** | |
| Thrust coefficient: | **0.222** | | Cavitation no. ($\sigma_n$) | **2.60** | |
| Ship speed | **12.2** | **kn** | Revolutions: | **18** | **rps** |

Figure 4. Cavitation diagram observations from model test of open propeller.

The considerable cavitation on the blades is due essentially to the pronounced non-uniformity of the wake field at the propeller, as can be seen from the contour diagram shown in Figure 5 and obtained in the towing tank by wake survey test.

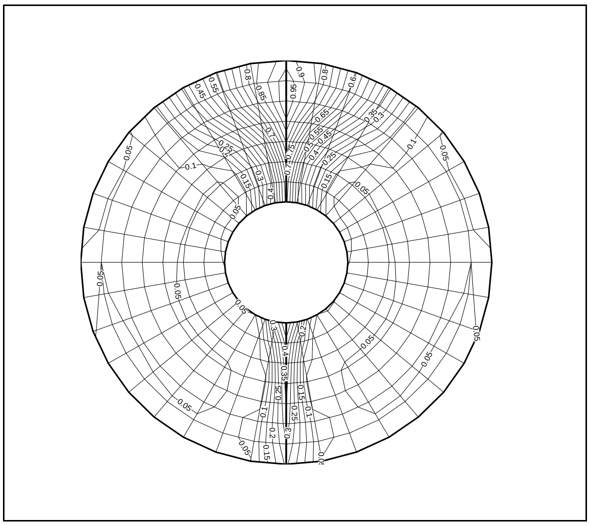

Figure 5. Contour lines of the nominal wake from wake survey test of open propeller

The adoption of this open propeller would create inacceptable, especially for this kind of ships, conditions for vibrations and noise and there was no margin in schedule to modify the stern ship forms – the main cause of this severe non-uniformity of the wake field. Additionally, in trawling regime, the loads on the propeller increase, reducing the propulsive efficiency. All this suggested that possible improvement could be obtained substituting the conventional propeller with a ducted propeller. A decelerating nozzle would permit the decrease of the cavitation, but the effect on the propulsive efficiency could be negative. It was decided to try an accelerating nozzle DP expecting a positive effect from the homogenizing action of the nozzle and some gain in propulsive efficiency.

Due to the advanced stage of the project the design was very limited in time and restricted just to the adapting and fitting of a ducted propeller of the Wageningen Ka-19A series in the given hull aperture.

To check the option of substituting the open propeller with DP, MPUF-3A was run for the open propeller and in combination with the Euler solver – for the ducted propeller. The gridding used for the DP case is shown on Figure 6.

The results for the extension of cavitation are shown in Figures 7 and 8, respectively. Note that the numerical diagrams do not include tip vortex presentation. Clear decrease of cavitation extension and volume for the propeller in nozzle is observed.

Then the propeller and nozzle models have been manufactured and tests carried out. Measurements of the velocity field inside the duct without the propeller confirmed the reduction of the non-uniformity of the nominal wake inside the nozzle (Figure 9). Observations of the cavitation on the model propeller blades inside the nozzle presented on Figure 10 showed clear reduction of the extent of cavitation – the objective of the application of the DP.

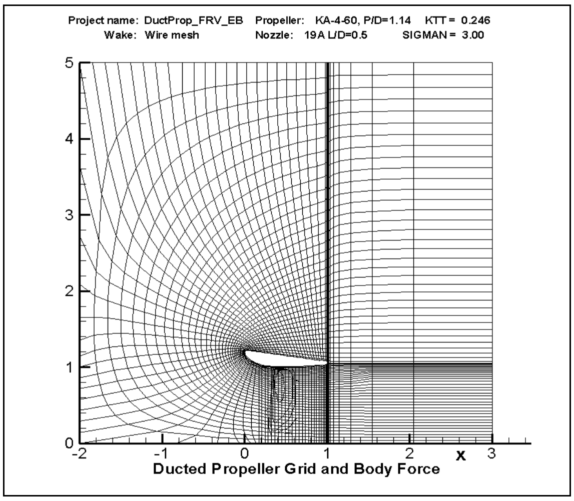

Figure 6. Gridding of the Euler solver domain

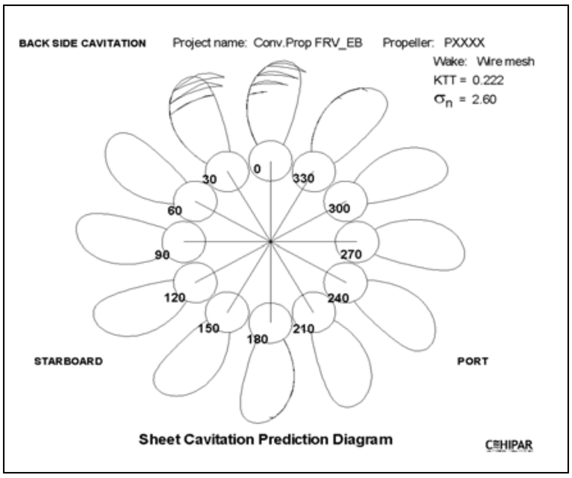

Figure 7. Numerical prediction of sheet cavitation on open propeller blades

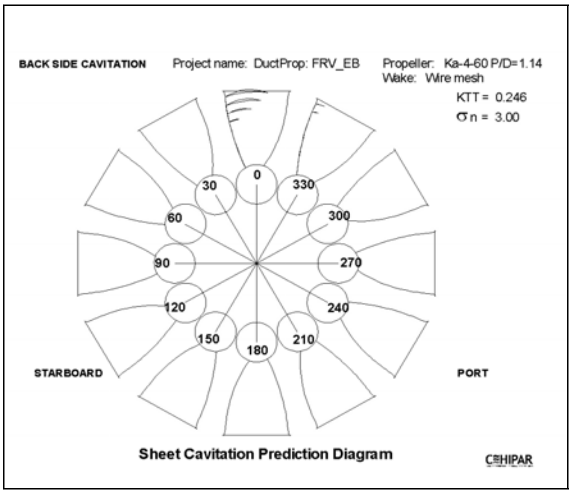

Figure 8. Numerical prediction of sheet caviation on ducted propeller blades

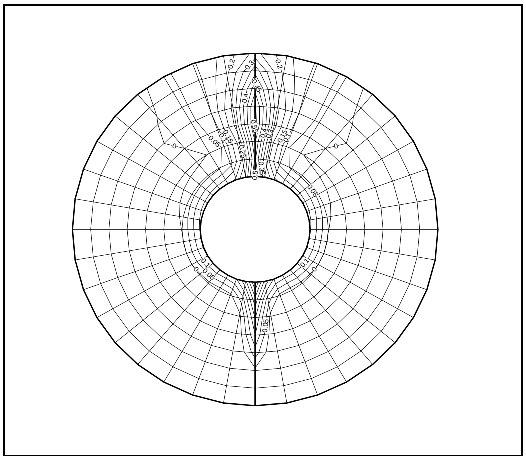

Figure 9. Contour lines of the nominal wake from test inside the duct.

**Cavitation Model Test** No. **4655** OTI: **2233-CAV**
Ref. tests: Self-propulsion No. **16604** Open water No. **13255**

| | | | | | |
|---|---|---|---|---|---|
| *Hull No.* | XXXX | | *Propulsor No.* | XXXX | |
| Draught, aft | **2.6** | **m** | Type: Ducted Propeller | | |
| Shaft immersion: | **1.7** | **m** | Diameter: | **1.7** | m |
| Shaft inclination: | **0.0** | **degr**. | P/D r=0.7 | **1.140** | -- |
| Wake model: **Wire mesh** | | | Nozzle: 19A, L/D=0.5 | | |
| *Full scale conditions:* | | | *Model scale conditions:* | | |
| Revolutions: | **308** | **rpm** | Scale: | **6.75** | |
| Total thrust coefficient: | **0.246** | | Cavitation no (**$\sigma_n$**) | **3.00** | |
| Ship speed | **12.2** | **kn** | Revolutions: | **18** | **rps** |

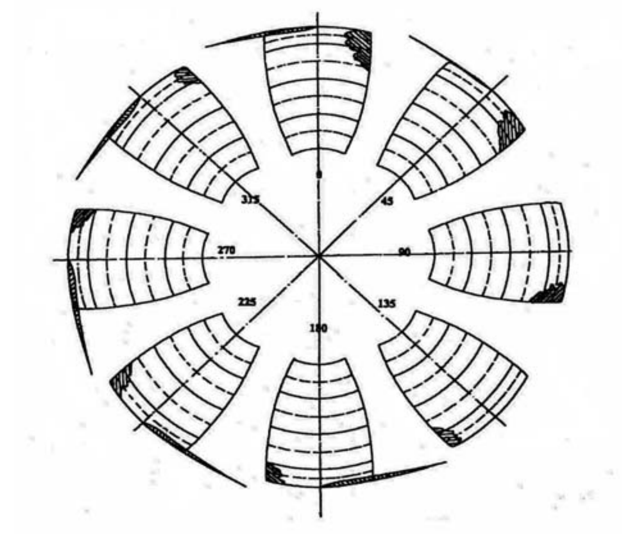

Figure 10. Cavitation diagram from model test of ducted propeller.

The model tests also showed that the spots of cloud cavitation detected in the tip region of the blades of the conventional propeller (Figure 4) do not appear in the ducted propeller blades (Figure 10).

An additional positive result obtained from the self-propulsion tests was the small gain in speed, due to a slight increase of the propulsive efficiency. This latter was due to the considerable increase of hull efficiency of DP compared with the open propeller. There is no doubt that the propulsive efficiency gain would be more pronounced if a possibility existed to optimize the propulsor.

Finally, the full scale trials conducted by TSI to measure the vibrations of the hull structure (Beltran, Galindo, Sánchez-Herrera and Pérez, 2006) obtained values inferior to 2 mm/s, being significant the propulsor's contribution to this very good result of vibrations norms accomplishment.

## V. CONCLUSIONS

An integral approach combining numerical predictions with model tests permitted to solve satisfactorily the propulsion of a ship fitted with ducted propeller.

For the time being model test measuring of the steady forces is still required for precise predictions of the DP performance, especially at the final design stage. Nevertheless, the precision of the predictions based on RANSE code or adjusted inviscid code is sufficient for the actual application and is a of valuable help during the design process.

The versatility of the inviscid tools, like lifting surface and panels, as well as Euler solvers, and their ability to estimate the unsteady effects and the cavitation in reasonable time make them still very useful for engineering purposes. The satisfactory precision of the predictions for the sheet cavitation on both, conventional and ducted propellers blades can be deduced comparing Figures 7 and 8 with Figures 4 and 10.

The RANSE solutions can predict with sufficient engineering precision the steady forces on the duct and the propeller. This is of interest for specific, non-series designs, but require computational time not always compatible with the time limitations of the practical projects. They are very good tools to assess the problems related to details of the flow. The analysis in non-uniform flow and the cavitation prediction are still pending tasks for the RANSE methods of the near future.

## ACKNOWLEDGMENT

The authors would like to thank the Technical Area of CEHIPAR for carrying out the model tests and acknowledge the management of CEHIPAR for the support of this work. Thanks are also due to Dr. Amadeo García.

## REFERENCES

[1] Abdel-Maksoud, M., Heinke, H.-J., "Investigation of viscous flow around modern propulsion systems", CFD'99, Ulsteinvik, 1999.

[2] Abdel-Maksoud, M., Heinke, H.-J., "Scale effects on ducted propellers", $24^{nd}$ Symposium on Naval Hydrodynamics, Fukuoka, 2002.

[3] ANSYS CFX v.12 Documentation. 2009.

[4] Baltazar, J., Falcao de Campos, J.A.C., "On the modelling of the flow in ducted propellers with a panel method.", First Intern. Symposium on Marine Propellers, Trondheim, 2009.

[5] Beltrán P., Galindo C., Sánchez-Herrera C., Pérez Fco.A., Silent fishing ships: Milestone of the small and medium size shipyards in Spain. Lessons learned". Ingeniería Naval, Febrero 2006, (In Spanish).

[6] Bobo Mª J., De La Rosa J-C, " Selection of stock propeller and model tests of a fishing research vessel for M.Cies Shipyards", OTI 2233-1, CEHIPAR, Nov. 2004. (In Spanish)

[7] Bobo M$^a$ J., De La Rosa J-C, Masip J., Quereda R., Pangusión L, " Design of ducted propeller and model tests of a fishing research vessel for M.Cies Shipyards", OTI 2233-2, CEHIPAR, Jan-Apr. 2005. (In Spanish).

[8] Falcao de Campos, J.A.C., "On the calculation of ducted propeller performance in axisymmetric flows.", PhD Thesis, Delft, 1983.

[9] Gibson, I., Lewis, R., "Ducted propeller analysis by surface vorticity and acuator disk theory", Symp. On Ducted Propellers, RINA, 1973.

[10] Haimov H., Valle J., Baquero A., "Implementation of CFD Tools for Improvement of Ship Hydrodynamic Performance." MARIND'2002, Varna

[11] Haimov, H., Terceño M., Trejo, I., "Use of commercial RANSE code for open water propeller calculations.", 10th NuTTS, Hamburg, 2007.

[12] Haimov, H. "Design of propellers of low vibroactivity and good propulsive efficiency", Ingeniería Naval, No.855, enero 2008, pp.24-25. In Spanish

[13] Hoekstra, M., "A RANS-based analysis tool for ducted propeller systems in open water condition.", I.S.P., 53 (2006), 205-227.

[14] ITTC Symbols and terminology list, Version 2008.

[15] Kerwin, J., Kinnas, S., Lee, J., Shih, W., "A surface panel method for the hydrodynamic analysis of ducted propellers", Trans. SNAME, vol.95., 1987.

[16] Kim, J., Peterson, E. and Stern, F., "RANS simulation of a tip-leakage vortex flow on a ducted propeller marine propulsor.", Journal of Ship&Ocean Technology, March 2004.

[17] Kinnas S., Young Y., Lee H., Gu H., Natarajan S., "Prediction of cavitating flow around single or two-component propulsors, ducted propellers and rudders", CFD 2003, London, 2003.

[18] Lee, H., Kinnas, S., "Prediction of cavitating performance of ducted propellers". Sixth Intrn.Symp. on Cavitation, Wageningen, 2006.

[19] Lewis R., Ryan P., "Surface vorticity theory for axisymmetric potential flow past annular aerofoils and bodies of revolution with application to ducted propellers and cowls", Journal Mechanical Engineering Science, vol.14, No.4, 1972.

[20] Morgan, W., "Theory of the annular airfoil and ducted propeller", Forth Symposium on Naval Hydrodynamics, 1962.

[21] Oosterveld, M.W.C., "Wake adapted ducted propellers", Thesis of the Technical University Delft, 1970. NSMB Publ. No.345.

[22] Pérez G., González-Adalid J., García A., Masip J., Quereda R., Pangusión L., Minguito E., Beltrán P., Galindo C., Pérez M., " Full scale comparison of a spuperferry performance fitted with both high-skewed and CLT blades.", WMTC, London, 2006.

[23] Sánchez-Caja, A., Rautaheimo, P., Siikonen, T., "Simulation of incompressible viscous flow around a ducted propeller using a RANS equations solver.", 23rd Symposium on Naval Hydrodynamics, Val de Reuil, 2001.

[24] Sánchez-Caja, A., Pylkkänen, J., Sipilä, P., "Simulation of the incompressible viscous flow around a ducted propeller with rudders using a RANSE solver", 27rd Symposium on Naval Hydrodynamics, Seoul, 2008.

[25] Varsamov K., Haimov A. , "Axisymmetric Potential Flow in Ducts" , Journal of Hydronautics , vol.12, No.2, 1978.

[26] Varsamov K., Haimov A. , "Axisymmetric Potential Flow about a Multiply-Connected Body in Duct" , Proc. of 6th Conference on Fluid Machinery, Vol.2, Budapest, 1979.

[27] Varsamov K., Haimov A., Minchev, D."The use of varibale load actuator disk in the design of ducted propellers." , Proc. of HYDROTURBO'85, Olomouc, 1985.

[28] Yosifov, K., Zlatev, Z., Staneva, A., "Optimum characteristics equations for the K-J ducted propeller design charts", 3rd Inetrn. Congress on Marine Technology, Athens, 1984.